Wear ring securing methods

COPY COMPLIANT to the original document resident on the computer system at the time of printing

Index

1. Purpose & Scope 3

2. Design criteria 3

2.1. Tack welds 4

2.2. Axial grubscrews 5

3. References 5

COPY COMPLIANT to the original document resident on the computer system at the time of printing

1. Purpose & Scope

This procedure defines the methods and the design criteria for securing impellers and casing wear rings in their respective seats, focusing on solutions with tack welds and grub screws.

This procedure is applicable to Nova Milanese and La Spezia plants.

2. Design criteria

As per API 610, clause 6.7.3, metallic wear rings shall be held in place by a press fit and secured by locking pins, axial or radial screws, or tack welds. These securing features shall be designed to maintain the wear ring in position under operating conditions.

The impeller's front wear ring is typically the most critical one, as the differential pressure tends to displace it axially from its seat.

A minimum of three equally spaced securing points is required to prevent eccentric mounting and reduce local distortion of the seat.

As a general consideration, tack welds represent the preferred solution and shall be always used in the base design. If they are not accepted by the Customer, axial grubscrews shall be used.

In addition to the securing points, interference between a wear ring and the impeller's or casing's relevant seat shall be provided as per the following recommendations:

- Rotating wear rings: the interference shall be defined to hold the wear ring in place during operation as if no securing points were present. In this case, the spreadsheet **Mod.481** can be used to estimate the contact pressure between the impeller and the wear ring. Given the minimum pressure, the minimum friction force is calculated multiplying it for the static friction coefficient (typically 0.2 for steel). This force shall be greater than the load generated by the differential pressure.
- Stationary wear ring: slight interference is usually required just to allow proper centring of the wear ring in its seat during assembly.

The previously mentioned considerations are applicable for metallic wear rings. In case that non-metallic wear rings are provided, recommendations from **SOP-505** shall be considered.

COPY COMPLIANT to the original document resident on the computer system at the time of printing

2.1. Tack welds

Tack welds are the preferred securing method. The number of tack welds shall be 3, equally spaced along the mounting circumference (120° apart).

The preferred welding method is TIG type.

The filler material shall be compatible with the base material.

Typically, cylindrical pockets of 6 mm and 1-1.5 mm of depth are machined in the mounting circumference, to accommodate the subsequent tack welds.

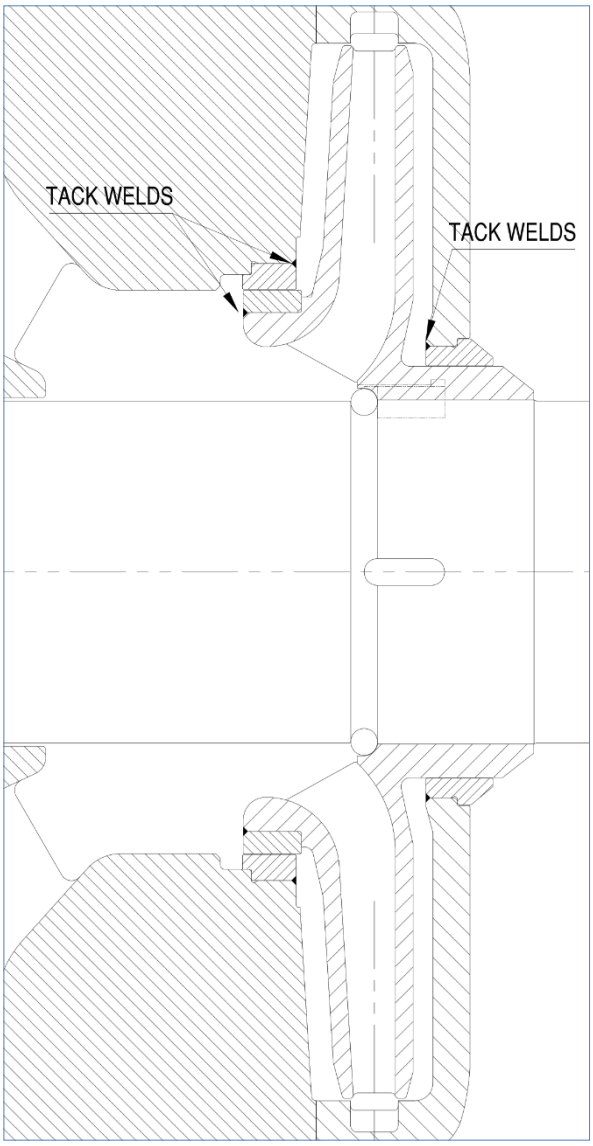

Figure 2.1: Typical drawing of tack welds on impeller and casing wear rings.

COPY COMPLIANT to the original document resident on the computer system at the time of printing

2.2. Axial grubscrews

The axial grubscrews shall always be used as securing method when the tack welds are not feasible due to project requirements and/or material incompatibility.

The grubscrews shall be at least N. 3 and sized M6 x 12 and equally spaced along the interface circumference (120° apart).

The grubscrews material shall be the same as or better than the base material of the wear ring or casing/impeller.

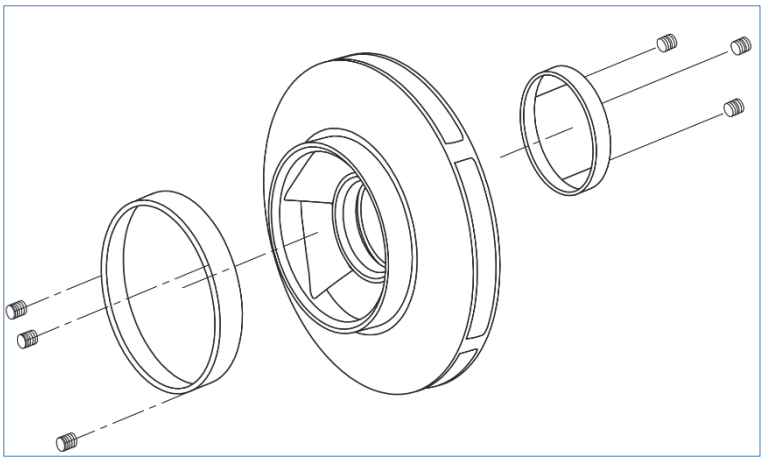

Figure 2.2: Typical design with grubscrews on front and rear impeller wear ring.

3. References

SOP-505 - *Non-metallic wear parts design criteria*

Mod. 481 - *Running clearance calculation*

COPY COMPLIANT to the original document resident on the computer system at the time of printing